ecodyst

Ecodyst Hydrogen® Rotary Evaporator

The high-performance all-in-one rotary evaporator. Revolutionary. Efficient. Smart.

Ecodyst's hydrogen is the high performance rotary evaporator for the modern chemist. This innovative product has been developed by award winning scientists to save your laboratory time, energy and money.
The Hydrogen® is easy to operate, occupies >50% less bench space and eliminates the need to use dry ice.
This disruptive technology has set new standards worldwide for rotary evaporators, meeting your current and future needs. Futureproof your lab with the Hydrogen® rotary evaporator.

- Small footprint
- Faster rates of evaporation
- Energy efficient
- Minimal running costs
- Digital display of rotation speed, cooling & heating temperatures enables optimal control of all distillation procedures
- Remote function enables data transmission and PC control
- Overheating protection & automatic motor lift in the event of power failure
- Includes a 5-L heating bath with a broad temperature range from room temperature to 180 °C. Water/oil heating modes can be switched at the push of a button
- Speed ranges from 20 to 280 rpm, and interval operation in both anticlockwise and clockwise directions are available for the drying process

Code	Description
EVA1208	Ecodyst EcoChyll X1 Standalone Condenser with Condenser Body Glassware

View the range online:
www.analab.co.uk/ecodyst or **www.analab.ie/ecodyst**

EVA1210 EVA1208

Ecodyst EcoChyll X1

A powerful energy-efficient self-cooling condenser that can upgrade any brand of rotovap.

Using a proprietary and innovative self-cooling technology, Ecodyst has revolutionised rotary evaporators to be more efficient, have a smaller footprint, to have a greater output and to be less expensive to operate.
Ecodyst's devices are equipped with intelligent self-cooling condenser technology that is extremely efficient at condensing vapours. This technology is environmentally friendly, energy efficient, reliable and sustainable. Additionally, the condenser achieves rapid cool down (reaches -40°C in 60 seconds) and is always available, which eliminates downtime, increases productivity, and saves time and money.

- Powerful, Smart, Self-cooling Condenser
- Fast Rates of Evaporation
- Ready within 60 seconds of powering on
- Small Footprint
- Boost Productivity
- Eco-friendly, energy efficient and sustainable

Code	Description
EVA1210	Ecodyst Hydrogen Rotary Evaporator Without Vacuum Pump
EVA1212	Ecodyst Hydrogen Rotary Evaporator With Vacuum Pump

NEW

Sustainable FEATURES

What's Different About Ecodyst's NEW Disruptive Technology?

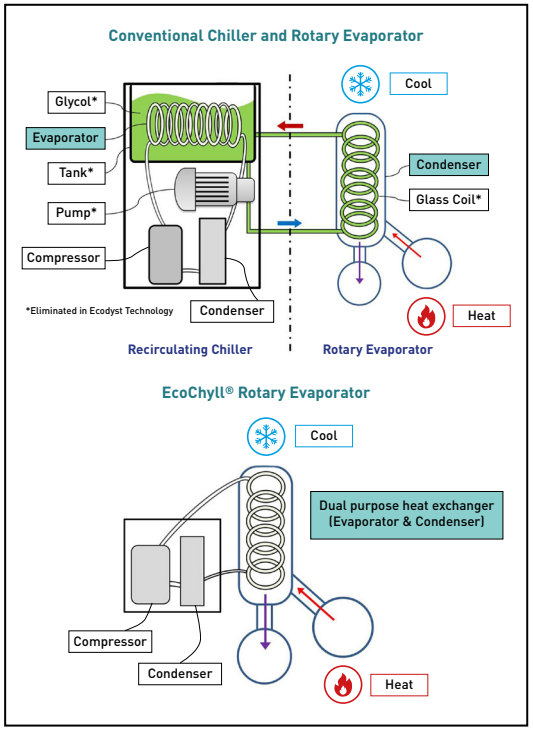

Proprietary first-in-class highly efficient metallic condensers for rotary evaporators

Direct self-cooling technology that truly eliminates dry ice and antifreeze chillers

Environmentally friendly, energy efficient and sustainable